Rev - 1	12/13/02	ADDED BASE...
Rev - 2	5/27/11	CORRECTED LOCKS.

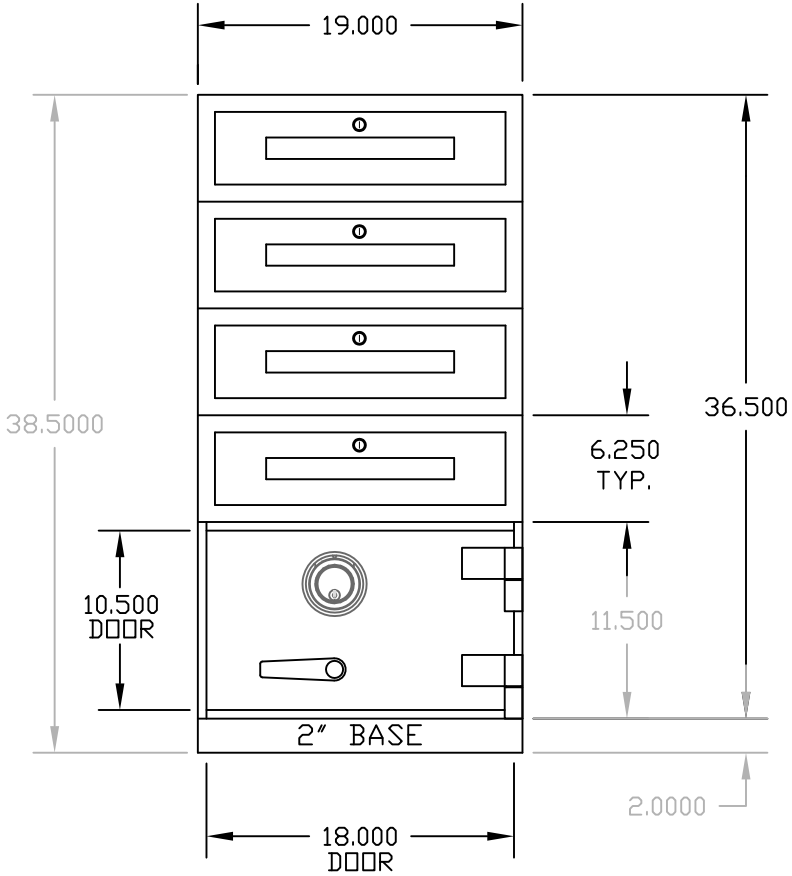

FRONT ELEVATION

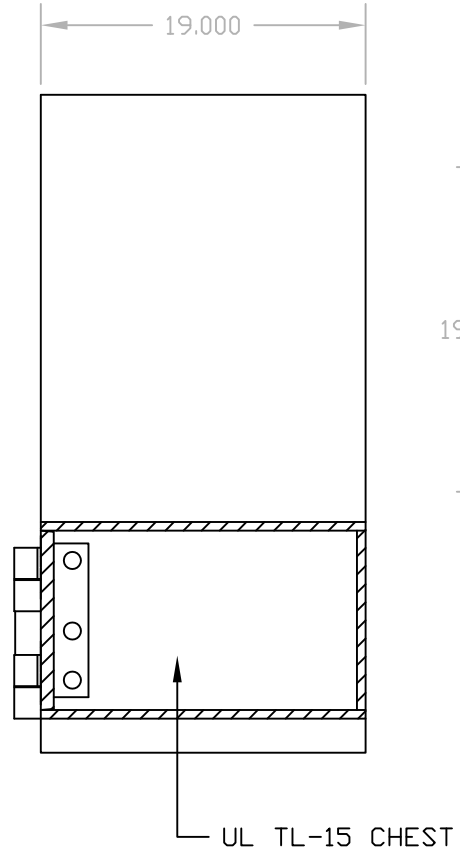

SIDE ELEVATION

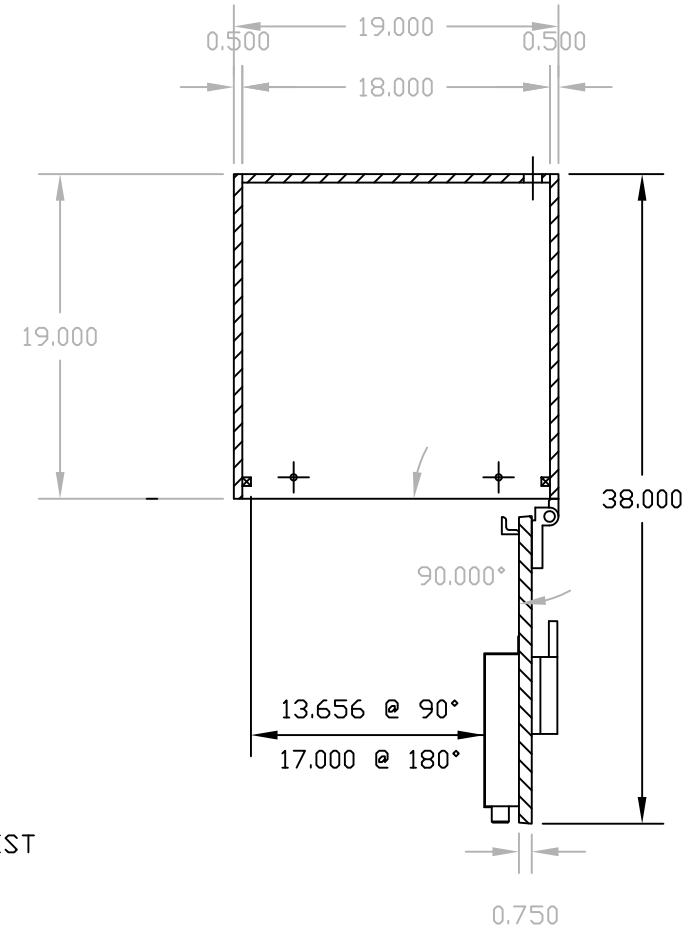

SECTION THRU SAFE

EQUIPMENT

1) CHEST 11 1/2"Hx19"Wx19"D, TL-15 (TWO DOORS) RIGHT SWING SHOWN
2) FOUR HSKS-101 MOUNTED TO TOP OF CHEST
3) BASE - 2"Hx19"Wx19"D
4) COLOR : INSTRUMENT TAN

HAMILTON SAFE

TELLER CASH STORAGE SAFE

MODEL #HSTL-15-4

Drawing Number : 95-872	Date : 5/15/02