IRT-5000

CUSTOMER UNIT
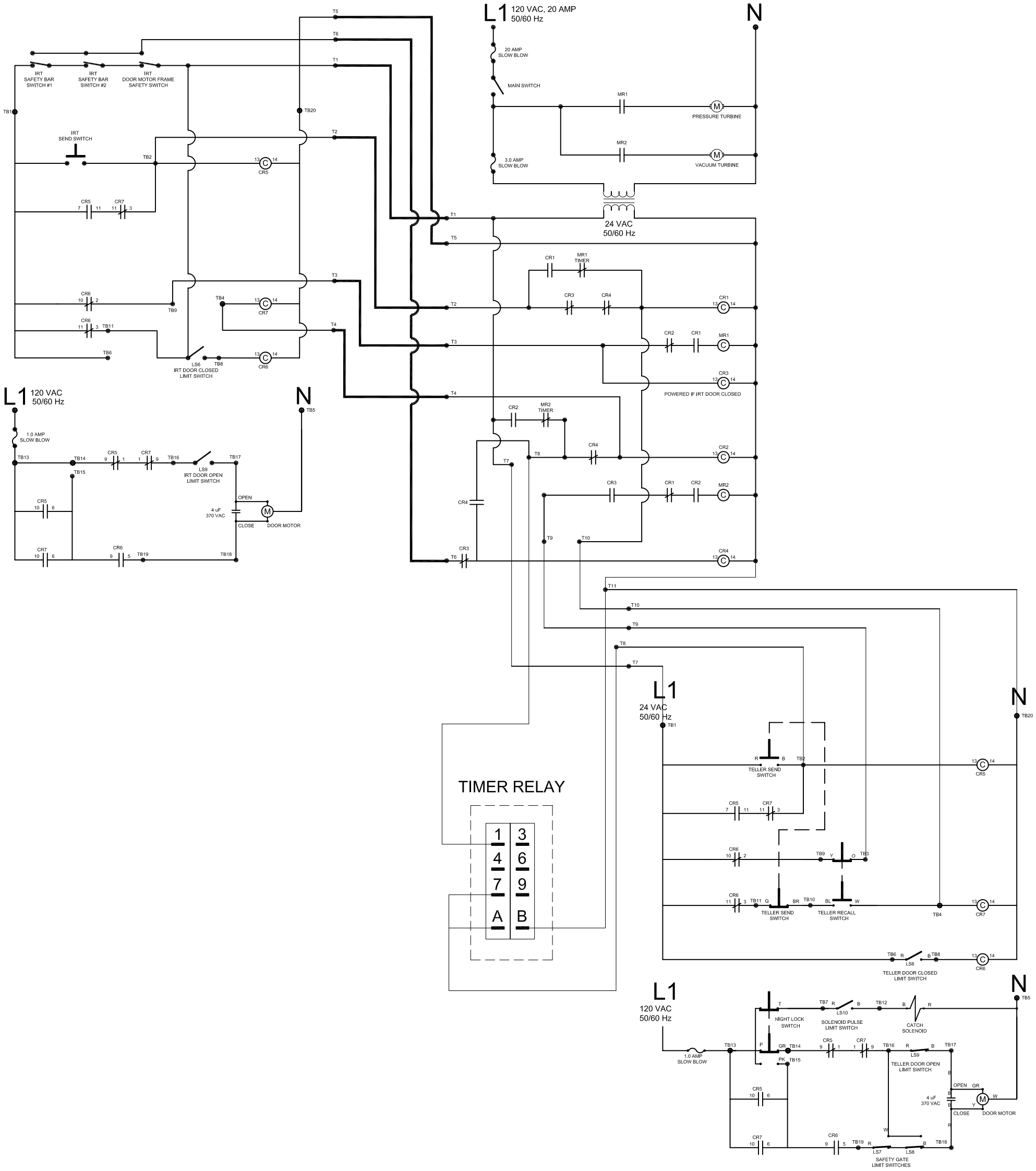
ELECTRICAL CONTROL UNIT